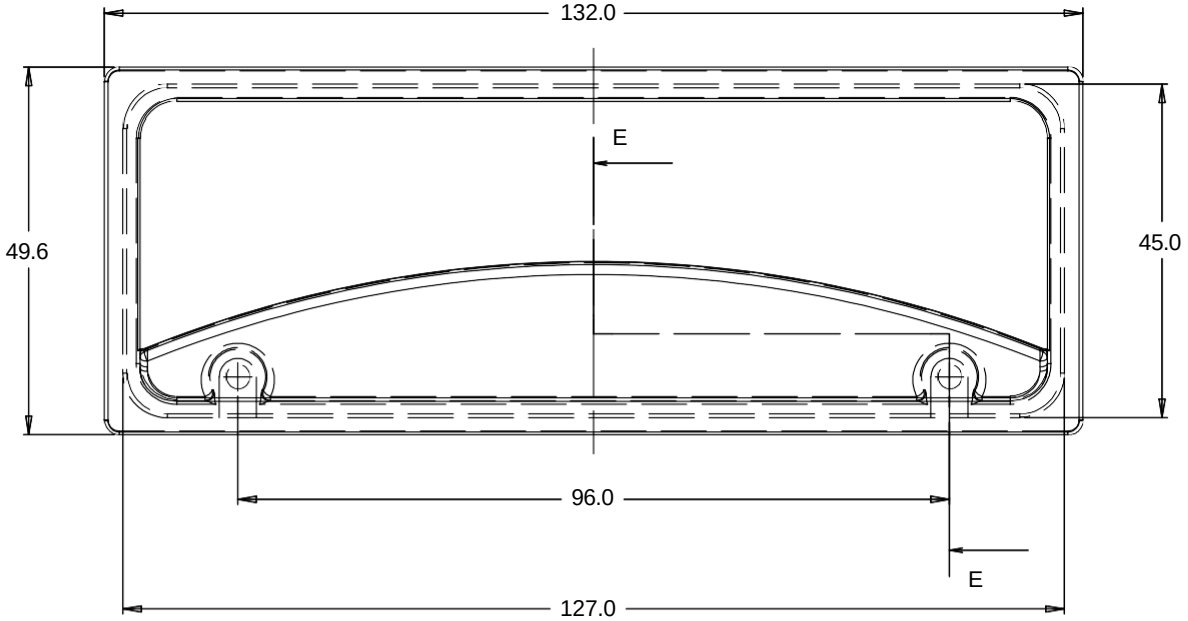

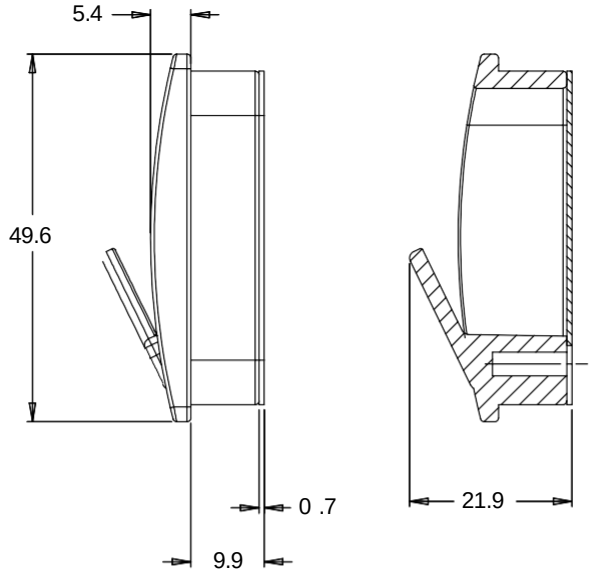

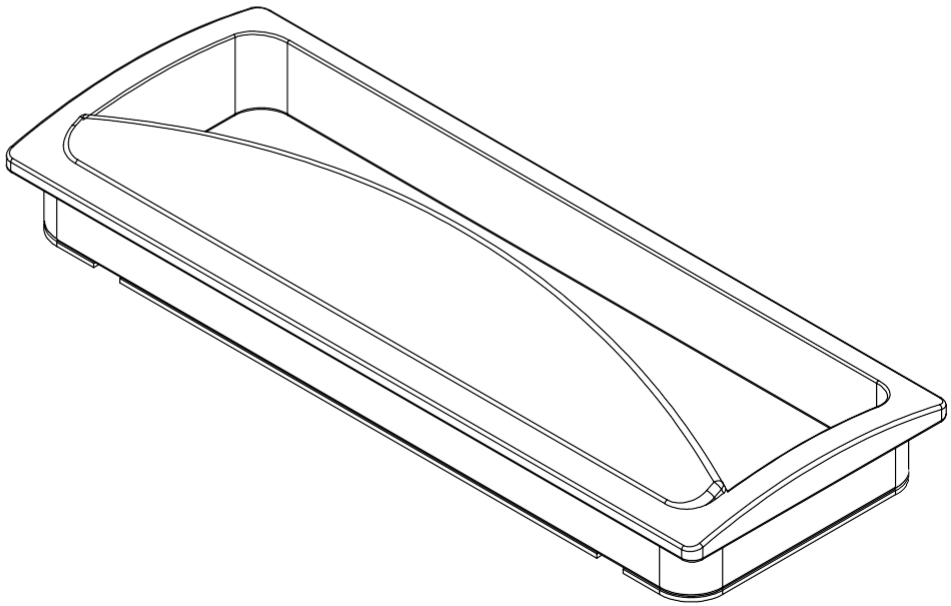

Salò
ART | DESIGN

Please note that the dimensions above are given in millimeters.

Part Number:
986-96