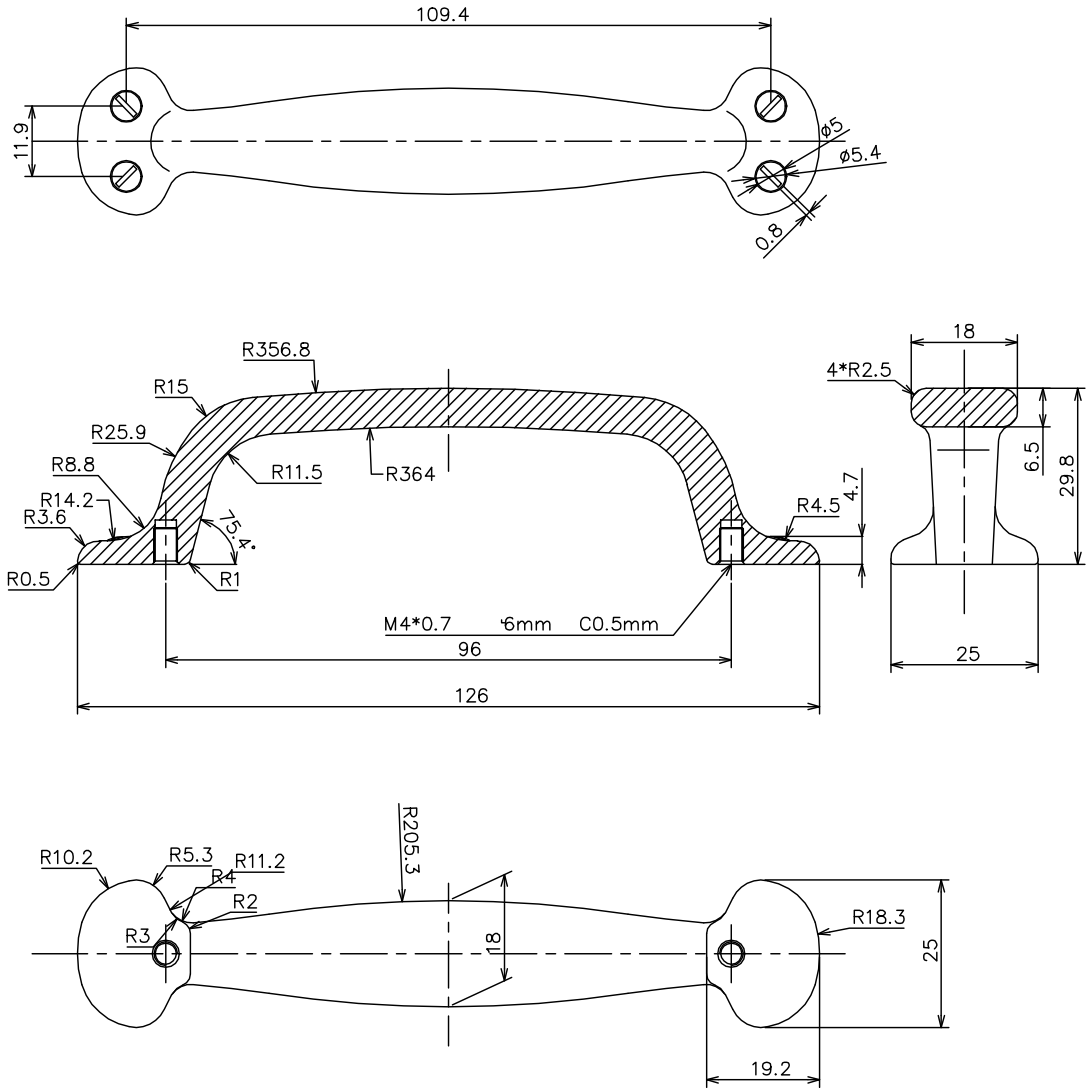

PART NO.	MATERIAL	DATE	
7890-1VB-P	**ZINC**	**07-18-2018**	Berenson™
COLLECTION **VIBRATO**	DESCRIPTION **VIBRATO 96MM CC VERONA BRONZE ANDANTE PULL**	PROPRIETARY AND CONFIDENTIAL **THE INFORMATION CONTAINED IN THIS DRAWING IS THE SOLE PROPERTY OF BERENSON CORP. ANY REPRODUCTION IN PART OR AS A WHOLE WITHOUT THE WRITTEN PERMISSION OF BERENSON CORP IS PROHIBITED.**	
UNIT OF MEASURE **MILLIMETERS**			